Lámina Dorada 45

Antoni Arola. 2023
Wall Lamp

IP 20

Lámina wall lamps offer a general and nuanced light. Both vertically and horizontally, the bounced light opens up to new depths.

General description:
Metallic flat shade with gold finish.
Black metal structure with matte finish.
Polycarbonate diffuser.

Approximate weight (unpacked):
1,5 kg / 3.3 lb

Technical information:
Dimmable light source included
Built-In LED

Rated input wattage: 11 W
Operating current: 500 mA
CCT: 2.700 K
CRI: 90
Lifetime: 40.000 h
Luminous flux: 245 lm

European version: suitable for dimming 0-10V / DALI. Not included external dimmer switch 0-10V / DALI.
American version: suitable for dimming 1-10V. Not included external dimmer switch 1-10V.
Suitable only for indoor use.
Non-replaceable light source.

Input voltage: 110 ~ 277 Vac.
(50 Hz / 60 Hz). According to destination.

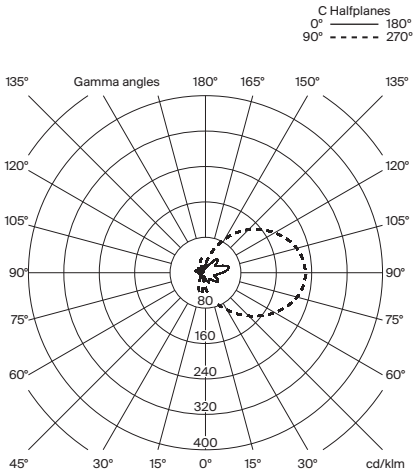

Regulations:
European version
UNE-EN 60598
UNE-EN 55015
UNE-EN 60529

American version
UL-1598
UL-8750
E-336377
Dry location only

Maintenance:
Clean with a smooth cloth. Do not use ammonia, solvents or abrasive cleaning products.

Others:
The lamp is delivered in one package.
The assembly instructions are delivered with the product.

Model / Code: European Version

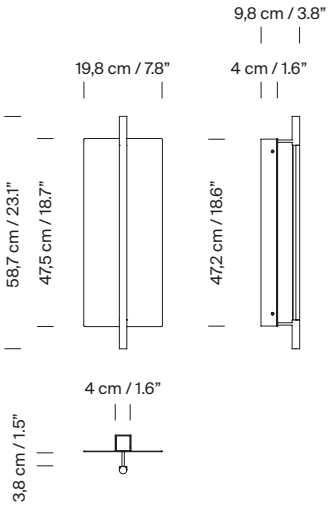

Code
LATWA01

Model / Code: American Version

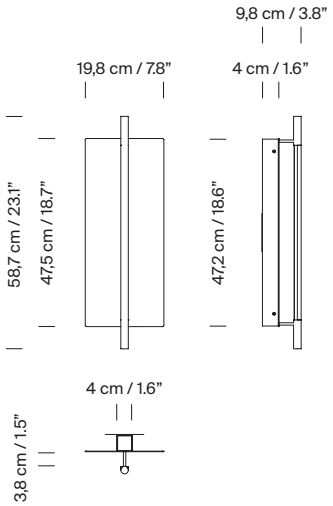

Code
LATWA01UL

Collection:

Table lamps

Lámina Dorada 45

Floor lamps

Lámina Dorada 45

Pendant lamps

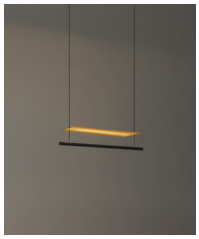

Lámina Dorada 45

Wall lamps

Lámina Dorada 45